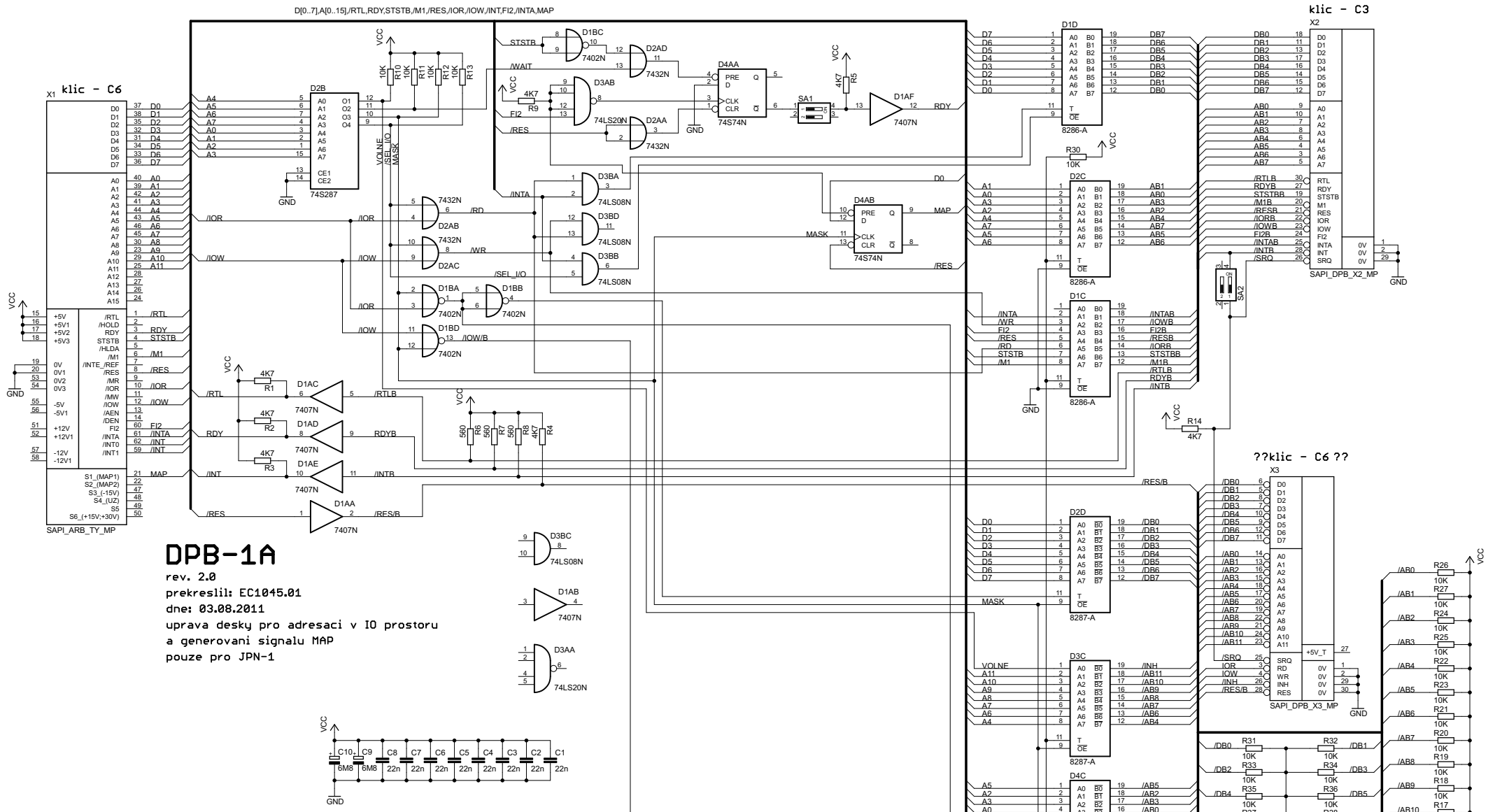
D[0..7],A[0..15],/RTL,RDY,STSTB,/M1,/RES,/IOR,/IOW,/INT,FI2,/INTA,MAP
klic - C6
X1
SAPI_ARB_TY_MP
klic - C3
X2
SAPI_DPB_X2_MP
??klic - C6 ??
X3
SAPI_DPB_X3_MP
74S287
74S74N
74S20N
74LS08N
7432N
7402N
7407N
8286-A
8287-A
SA1
SA2
VCC
GND
DPB-1A
rev. 2.0
prekreslil: EC1045.01
dne: 03.08.2011
uprava desky pro adresaci v IO prostoru
a generovani signalu MAP
pouze pro JPN-1